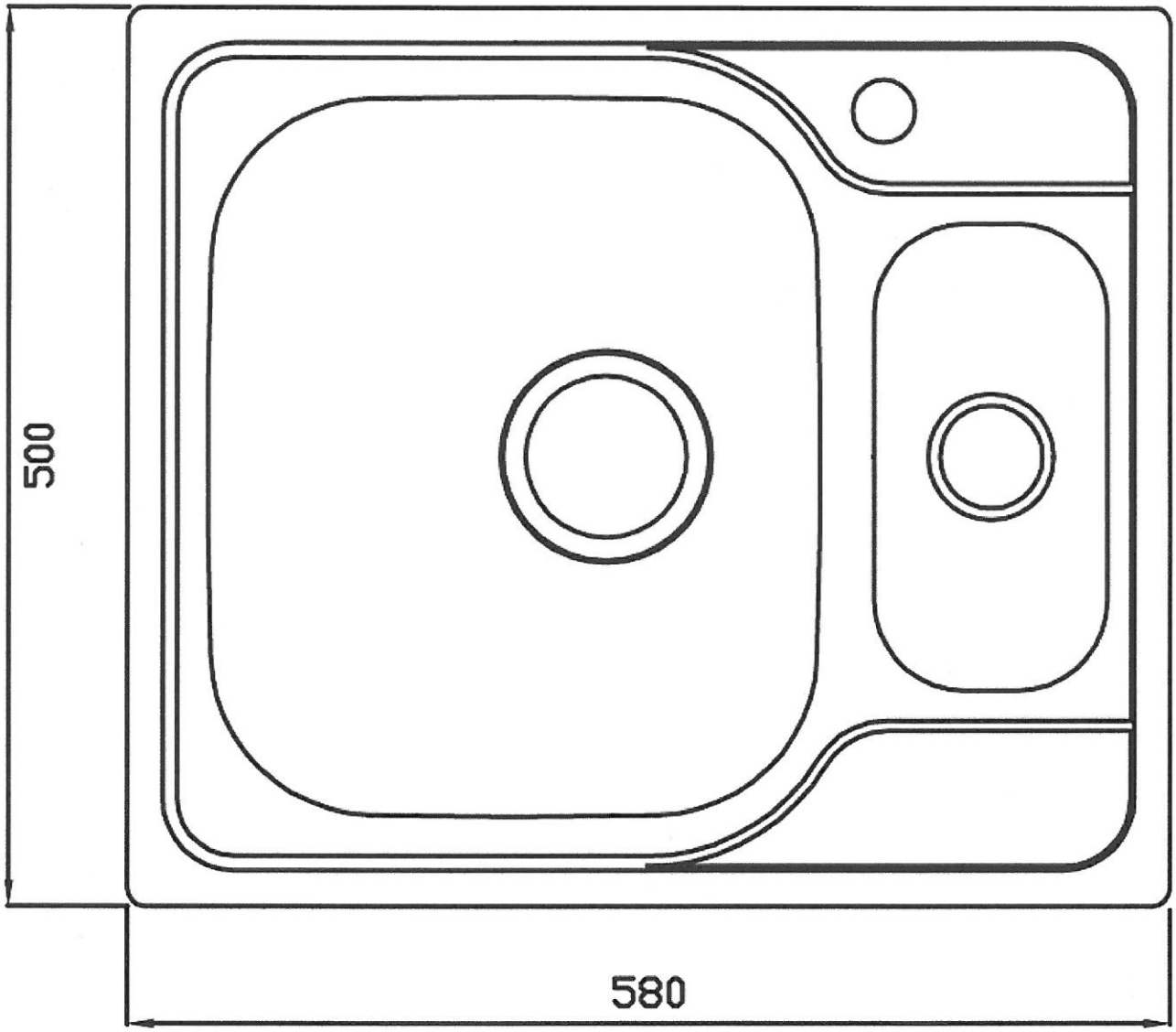

http://intra.gc.no/image_library/products/1501/prod_draw1_uni_150_2010.jpg